BLUESTAR®
Unleash Your Inner Chef®

NEW

BLUESTAR® 36" RNB SERIES V2

Introducing the all new RNB Series. Handcrafted in Reading, PA since 1880, BlueStar's most customizable line has been updated with cleaner lines and improved features that home chefs will love. Larger windows for viewing, easier cleanability plus enhanced oven performance makes the RNB Series a perfect choice. As always, available with integrated griddles, charbroilers, French tops and your choice of over 750+ colors & finishes.

Heavy-duty construction combined with innovative features produce an appliance of uncompromising durability, functionality and beauty that will be the focal point of your kitchen for years to come!

Refined Design and Easier-to-Clean Cooktop
The new RNB Series has an updated sleeker design that features a larger windows for viewing plus a one piece control panel. In addition, an improved grease pan design and simplified burner support allows for easier cleaning.

Powerful 22,000 BTU Burners & Precise Simmer Burner
The UltraNova™ burner provides 22,000 BTUs of cooking power, perfect for a rapid boil, high-heat sear, or a perfect saute. The precise 130ºF simmer burner easily melts chocolate and can gently warm delicate soups and sauces. Integrated wok cooking is available on any burner, plus BlueStar® burners and full-motion grates are porcelain-coated cast iron for the ultimate in durability.

Integrated Cooktop Options
No matter what your cooking preference the RNB has an option for you. Custom configure any cooking surface to suit your specific needs. Complement BlueStar® burners with your choice of 12" or 24" fully integrated griddles, charbroilers or French Tops.

Extra-large Convection Oven with Infrared Broiler
BlueStar® ovens can accommodate full-size commercial sheets pans, for the ultimate in efficient cooking or baking. The unique oven baffle design and convection fan system result in even heat distribution for precise accurate baking. Plus, our 15,000 BTU infrared broiler produces 1850º of intense searing heat, enabling you to broil to perfection in just a matter of minutes.

Fully Customizable
BlueStar® RNB ranges can also be customized to suite your personal design and style. Add a splash of color to your kitchen with one of BlueStar's 750+ different colors and finishes. Or add a touch of color with colored knobs on any RNB range. Further customize with metal trim finishes, optional swing doors, and different backguard heights. The options are endless.

Installation Specifications:

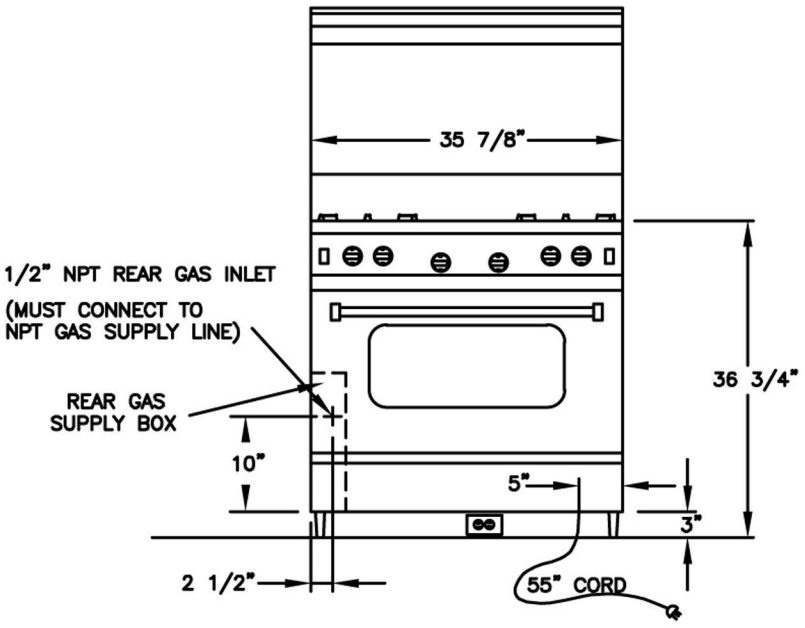

ELECTRICAL CORD LOCATED IN BACK OF UNIT

LOCATION OF ELECTRICAL OUTLET MUST
NOT BE HIGHER THAN 3" FROM FLOOR IF LOCATED BEHIND
THE UNIT OR CAN BE LOCATED IN AN ADJOINING CABINET.

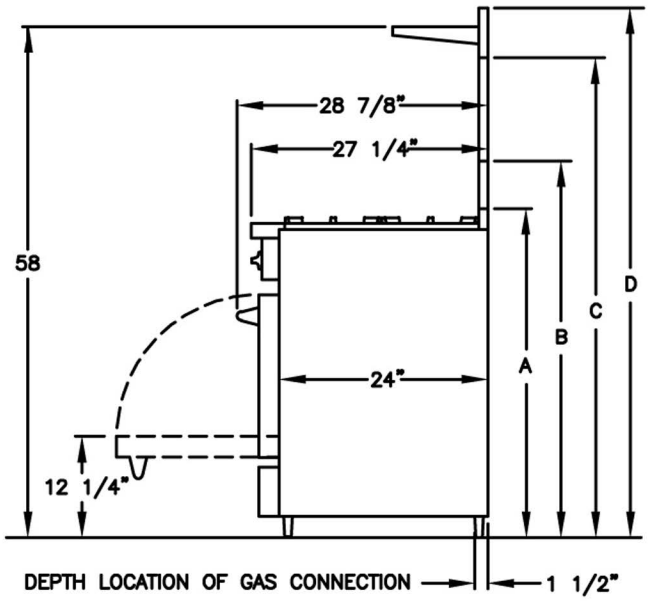

A – ISLAND TRIM HEIGHT – 38 1/4"
B – 6" STANDARD BACKGUARD HEIGHT – 43 1/4"
C – 17" BACKGUARD HEIGHT – 54 1/4"
D – HIGH SHELF BACKGUARD HEIGHT – 61"

SPECIFICATIONS:

· OVEN INTERIOR:	29"W x 20"D x 15"H
· SIMMER BURNER RATING	9,000 BTU, 130°F
· TOP BURNER RATING	15,000 BTU
· TOP POWER BURNER RATING	22,000 BTU
· CHAR GRILL BURNER RATING	15,000 BTU
· GRIDDLE BURNER RATING	15,000 BTU
· FRENCH TOP BURNER RATING	18,000 BTU
· OVEN BURNER RATING	30,000 BTU
· OVEN INFRARED BROILER RATING	15,000 BTU
· ELECTRICAL REQUIREMENTS (UNIT MUST BE ON A NON-GFI, DEDICATED OUTLET)	120V, 60Hz, 15 AMPS, 1 PH
· OPERATING GAS PRESSURE	NAT: 5.0" WC LP: 10.0" WC
· INSTALLATION CLEARANCE	0" SIDE CABINET 0" BACK WALL

OPTIONS

- CASTERS
- ADDITIONAL OVEN RACK
- FULL EXTENSION OVEN RACK
- CUSTOM COLOR

VISIT www.bluestarcooking.com FOR CUSTOM CONFIGURATIONS

File: 2011_RNB36.dwg

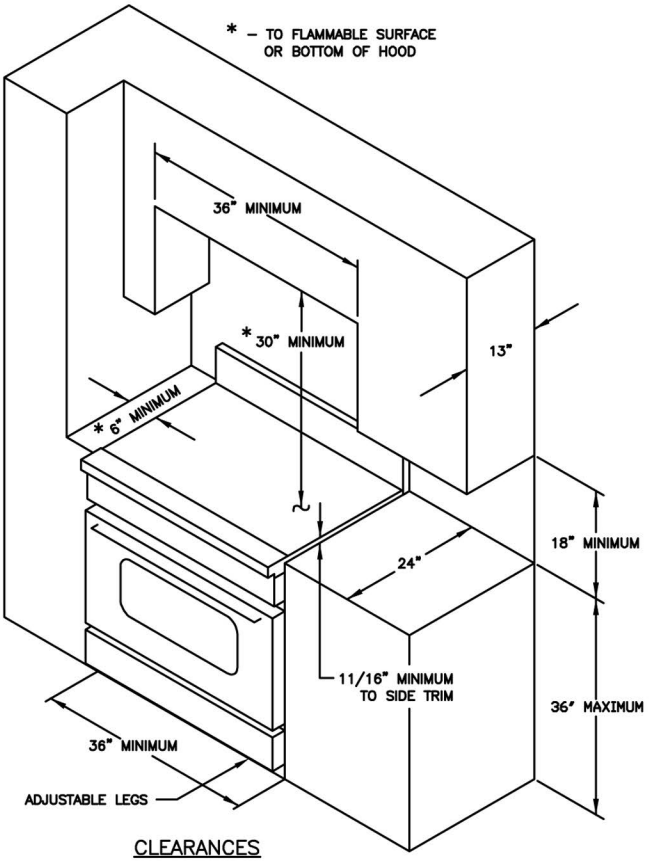

CLEARANCES

0608-02-RevB